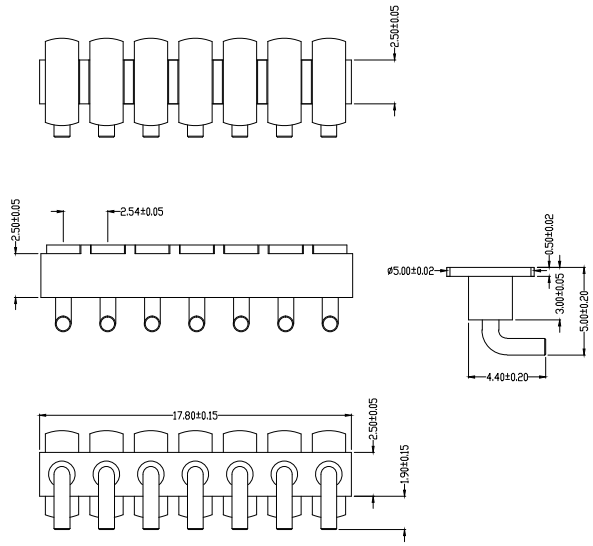

Note:
1 materials:
1-1 needle: C3604
1-2 plastic:PA46
2 surface treatment:
2-1 needle:
Gold plated 5uin/ nickel base 50-80uin
3 Mechanical properties:
3-1 stretch:
The working height of 3 . 0 mm
4 electrical properties:
4-1 rated voltage: 36V
4-2 rated current: 5.0A
4-3 contact resistance:30mOhm
5 ecological environment parameters:
5-1 high temperature resistance of 260 DEG C
5-2 storage temperature range:
Between -40 to 70 DEG C.
5-3 humidity range:
10%RH to 90% relative humidity.

Sumpak 深圳市森柏科技有限公司	GENERAL TOLERANCE: XX. ±0.40, X. ±0.25, .X ±0.10 .X° ±1.0°, .XX ±0.05 .XX° ±0.5°	SCALE: 15:1 UNIT: mm SIZE: A4	制图 李志强 批准 审核	DATE 2018-09-21 DATE DATE	DRAWING NO: SB-HY307P Material number:	Product Name: 7PIN母座连接器	REV. A SHEET 1/1

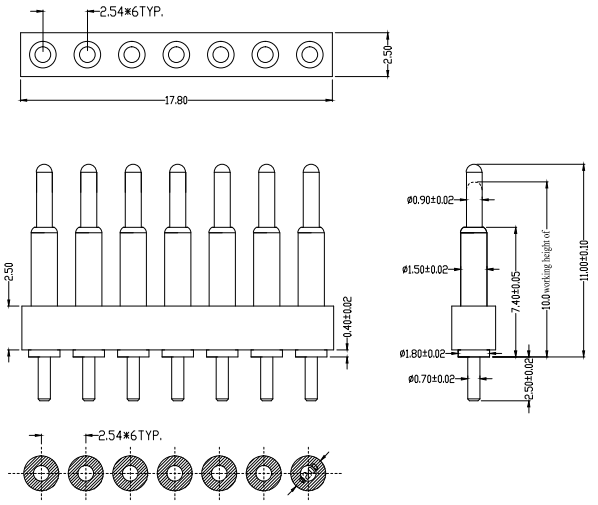

Recommended pcb layout

Note:
1 materials:
1-1 needle: C3604
1-2 tube: C3604
1-3 spring:SUS304
1-4 plastic:PA46
2 surface treatment:
2-1 needle:
Gold plated 10uin/ nickel base 50-80uin
2-2 casing:
5uin/ gold plating bottom 50-80uin
3 Mechanical properties:
3-1 stretch:
The working height of 10 mm
elastic 100g + 20%
3-2 durability: 10000 times
4 electrical properties:
4-1 rated voltage: 36V
4-2 rated current: 2.0A
4-3 contact resistance:30mOhm
5 ecological environment parameters:
5-1 high temperature resistance of 260 DEG C
5-2 storage temperature range:
Between -40 to 70 DEG C.
5-3 humidity range:
10%RH to 90% relative humidity.

Sumpak 深圳市森柏科技有限公司	GENERAL TOLERANCE: XX. ±0.40, X. ±0.25, .X ±0.10 .X° ±1.0°, .XX ±0.05 .XX° ±0.5°	SCALE: 15:1 UNIT: mm SIZE: A4	制图 李志强 批准 审核	DATE 2017-08-23 DATE DATE	DRAWING NO: SB-HY117P Material number:	Product Name: 7PIN连接器	REV. A SHEET 1/1